Proc. of 5th Int. Symp. on External Control of Human Extremities, ETAN, Yugoslavia, Dubrovnik 1975.

AN ADAPTIVE ELECTRODE TO FACILITATE SURFACE FUNCTIONAL STIMULATION

R.A. Beresford, R.W. Todd and J.M. Nightingale

ABSTRACT

Experience of functional stimulation with surface electrodes both at Southampton University Control Group and at other research centres has resulted in many diverse systems. A common failing in clinical use is a lack of repeatability both in time and across an ensemble of different patients. The root cause of this lack is a failure both to locate and maintain the stimulus electrode over the motor point. In some instances this can be partially circumvented by the use of large electrodes, typically in the case of footdrop where clinically useful assistance can be maintained over long periods. However in general some compromise between usefulness and uniqueness of response is accepted; for example, in the case of forearm stimulation the degree of individual muscle control would be considerably limited by a large electrode area because of the anatomical structure.

The paper describes an adaptive electrode system designed to maintain its active region over the motor point inspite of both short term variation caused by muscle/joint movements and long term drift caused by mechanical creep at the electrode skin interface. The initial positioning of the active region over the motor point is achieved by a novel hill climbing routine that takes advantage of the discrete nature of the electrode matrix. The prototype system has yielded contour maps of the finger force response verses stimulus position that clearly illustrate the problem.

PAPER

Research work at many different centres over the past 10 years has resulted in considerable experience in the various methods of functional electrical stimulation (F.E.S.). Initially attention was concentrated on helping patients suffering from footdrop, largely because it is one of the simplest problems to solve. Work was directed toward developing F.E.S. systems as useful assistive devices, early examples of which were mainly simple on-off open loop controllers, used both as research tools and as clinical devices.

A fundamental improvement in the basic systems was achieved by introducing some kind of negative feedback. In some cases a control signal derived from the integrated M response from a surface E.M.G. pick-up was used(1), while in other cases signals from mechanically derived force or position measurements were employed(2). Thus, in a simplified analysis, the F.E.S. systems can be treated as a servo loop, as shown in Figure 1, in which joint position or contact force is maintained at a useful level by allowing the stimulus amplitude to be driven to high levels to accommodate fluctuations in electrode efficiency. This basic system has been extensively studied both in terms of its individual elements and its actual performance(3 and 4).

The main problems encountered with the above simple systems, both in clinical use and in analytical study arise out of difficulties in obtaining repeatable results. The electrode system is difficult to locate over the motor point and once positioned correctly suffers considerably from drift.

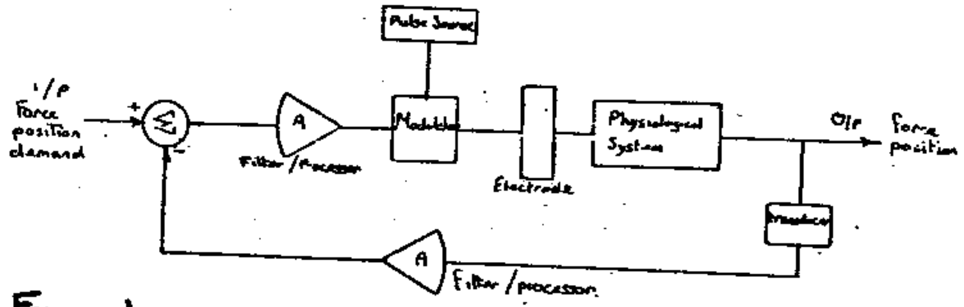

Figure 1 Model of simple FES system with negative feedback.

One solution, implantation of the stimulating electrode(5), offers an improvement in selectivity and substantial immunity from drift, but brings with it a considerable number of problems involving clinical considerations and component technology. These include biocompatability, rejection, the psychological state of the patient.

When dealing with the lower extremity the location problem is fortunately less critical since large area electrodes can be employed so that the motor point is always stimulated. For example, the active electrode area used in the Southampton Stimulator Mk III was approximately 4 cm^2(6). The ability to use a large electrode area arises out of the anatomical layout of the lower extremity. Surface stimulation of the peroneal nerve does not exhibit significant cross talk with either other nerves or muscles and elicits the desired foot eversion and dorsiflexion required to correct the gait of footdrop patients.

Experiments with forearm stimulators in an attempt to bring similar relief to wrist drop patients met with very poor response. The relative smallness of most forearm muscles and the lack of a common nerve, which is present in the footdrop case (peroneal nerve) conflicts with the increased variety and quality of control required of the arm/hand system. Useful prehension requires specific patterns of muscular activity that cannot be obtained by stimulation of any of the three main nerve trunks, singly or in combination. This indicates that muscle stimulation must be adopted here and the large electrodes that previously provided some measure of repeatability cannot be employed because of cross talk between different muscles and, indeed, different parts of the same muscle for the finger flexors.

In order to investigate the sensitivity of stimulation to electrode position change, an automatic test system was found to be necessary. Initial tests proved that the manual re-positioning of the electrode site introduces many other spurious response artifacts. These are due to additional variations in contact pressure, evaporation, skin abrasion, body posture, limb orientation, etc. All of these are consequent on the movements resulting from re-positioning the electrode and are not an intrinsic feature of the change in electrode position. A multi-element electrode was produced in order to avoid physical movements of the contact surface. Figure 2 shows a photograph of the multi-element electrode partially wired to the control matrix. Like chain mail it conforms to the skin surface well and is not uncomfortable when in place. Subsequently the location of the stimulation site was controlled electrically from a programming unit.

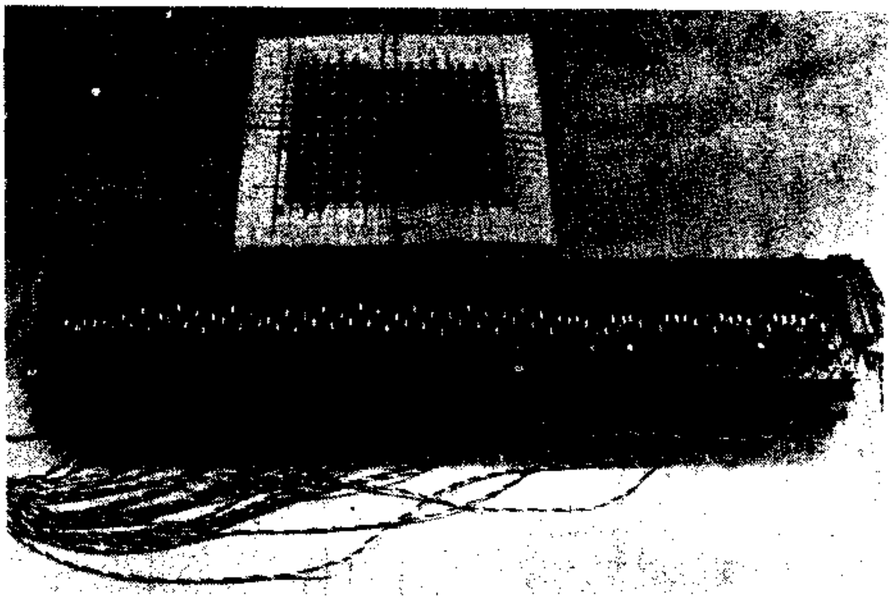

Figure 2 Photograph of multi element electrode array and decoding matrix.

As a compromise between the conflicting requirements for a large electrode to reduce the stimulation of dermal pain sensors to a subthreshold level and the need for a small element size so as to yield a useful resolution a Time Division Multiplex (T.D.M.) system was investigated. The T.D.M. system was found to be efficient provided that a multiplex frequency in excess of one Megahertz was employed. (The skin capacitance integrates the chopped stimulating pulses to reproduce the original unmodulated pulse with some residual ripple). The site of stimulation is sequentially selected by adding the multiplexed base pattern of the active region to the scanned centre address. The result is decoded with an AND gate matrix which detects row and column coincidence and energises the appropriate electrode elements. Thus the effective stimulation site can be scanned across the array of electrode elements in a raster pattern whilst the subject sits in a relaxed pose with his forearm in a constant undisturbed position. The block diagram of this automatic test system is shown in Figure 3. Most of the circuitry was constructed out of standard T.T.L. with a discrete transistor circuit realisation of the final high voltage output switching matrix.

Force was selected as the monitored response parameter as it is an easily measured quantity, relevant to eventual use, and results in the least disturbance of the arm/hand system under test. Excessive movement, even as a result of stimulation, is undesirable in this instance. The output of the force transducers (the force developed in the index, ring and middle fingers being the monitored output), was added to an analogue version of the generated digital raster and recorded on a Bryans multipen XY recorder. See Figure 4. The force transducer employed was a modified version of the system used in the prosthetic hand developed at Southampton(7) and functions by measuring the change in capacitance between a stiff load spring and an

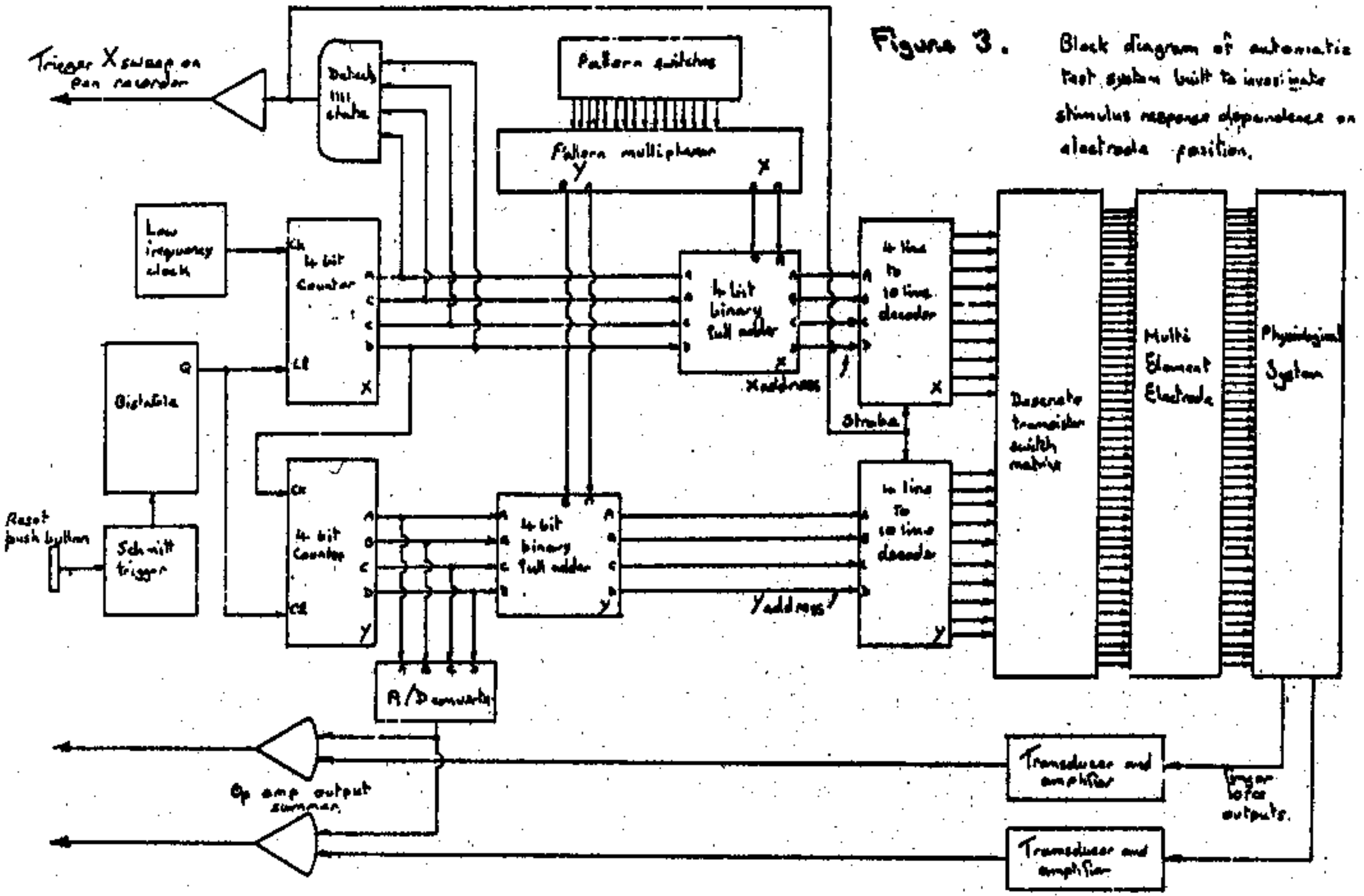

Figure 3. Block diagram of automatic test system built to investigate stimulus response dependence on electrode position.

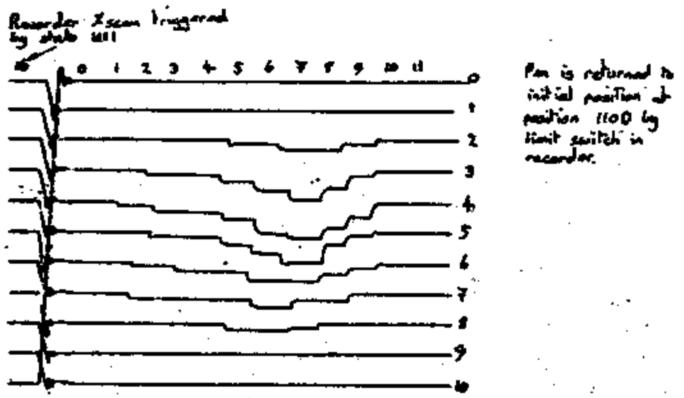

Figure 4. Example of record of output of automatic test system. Showing the way in which the force response is added to basic raster pattern to give both information on finger force and position of active electrode area.

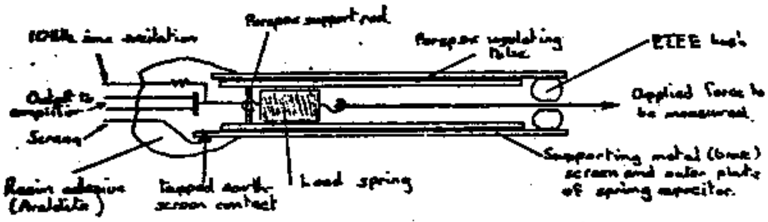

Figure 5. Physical structure of stretched spring force transducer.

outer earth shield plate. See Figure 5. The change in capacitance is due to an increase in edge field effects as the spring coil is opened and is a linear function of extension - see graph in Figure 6.

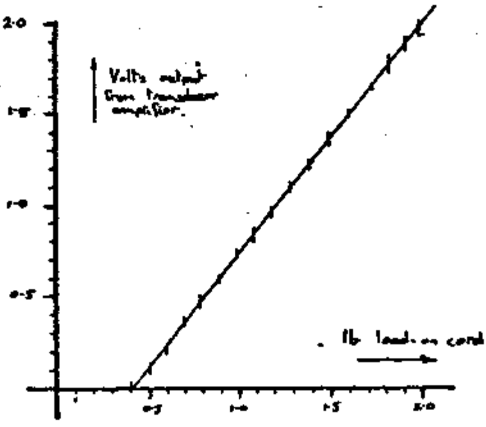

Figure 6 Graph showing output of transducer amplifier as a function of load on cord. Error bars represent average and range for ten test runs.

The photograph in Figure 7 shows the test apparatus in operation with the force transducers glued in a ridgid mounting frame fixed to the forearm over the electrode with velcro straps. Figure 8 shows a set of results obtained without any change in the electrode position. The drift in response as the arm is supinated is clearly illustrated. The third map Figure 9, shows the response with the electrode relocated in the same place the following day and exhibits the long term drift.

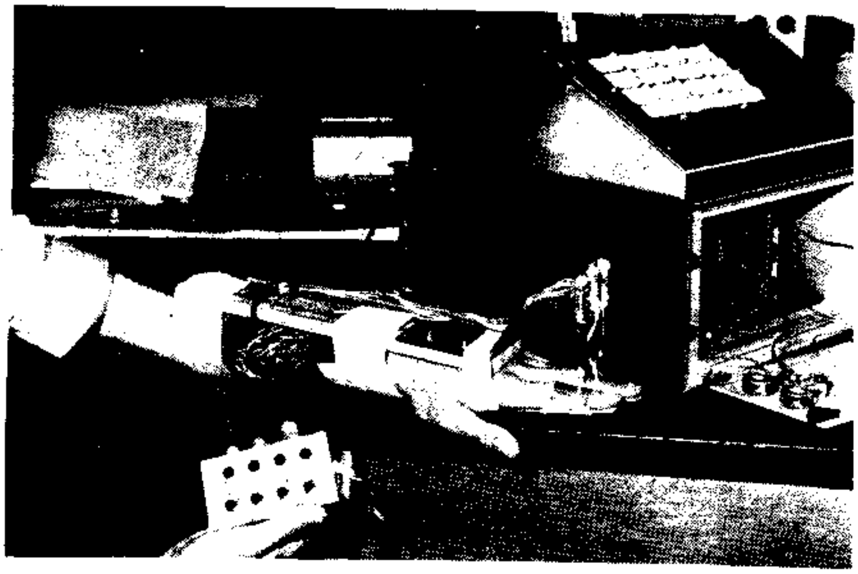

Figure 7 Test apparatus in operation

In a recursive approach to the drift problem, the first attempted solution was the inclusion of an open loop feed forward control of stimulus position to compensate for pro-supination of the hand. This was found to work, but was as difficult to set up initially as the original single electrode. Once localised over the motor point the tracking improved the electrical efficiency by some 30%. The block diagram is shown in Figure 10.

The final adaptive solution was to add another feedback loop to permit automatic searching for the initial stimulation position over the motor point. This hunt procedure is also triggered during subsequent operations if the percentage error in the force control loop exceeds a preset threshold.

The limited set of discrete stimulation sites means that many of the usual hill climbing routines are not applicable and because the response hill changes shape as well as position, systems relying on fitting to an internal model are inappropriate. Variable step gradient methods suffer from a basic gain restriction, imposed by the minimum step size,which is limited to a jump of one element. As the response hill can have several maxima a global search procedure is necessary. The method finally adopted uses a fine point pattern that can be revolved about its centre element and contracted

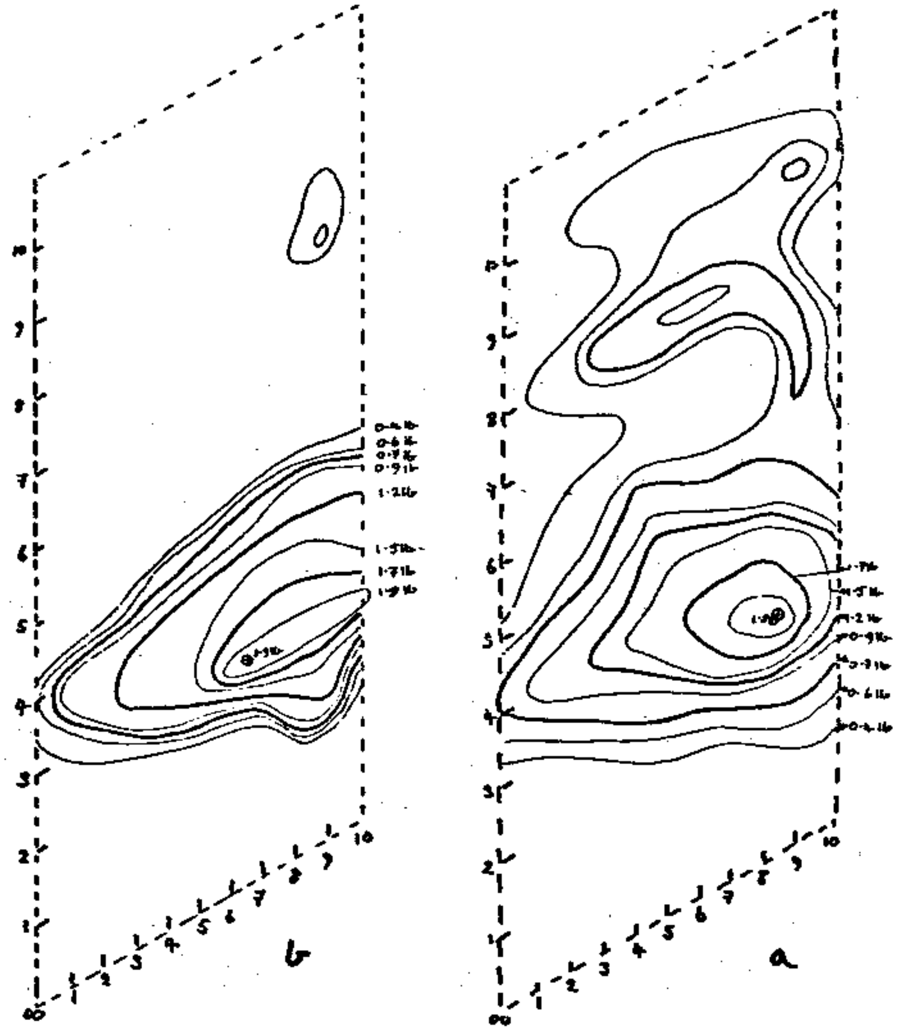

Figure 8

Maps of force produced by middle finger in response to position change of active region
a) hand in prone position
b) hand supine
Physical structure of electrode matrix being unmoved between test runs.

Figure 9

Map of force response with electrode in same position as for maps shown in Figure 8 but on the following day. Hand held in prone position.

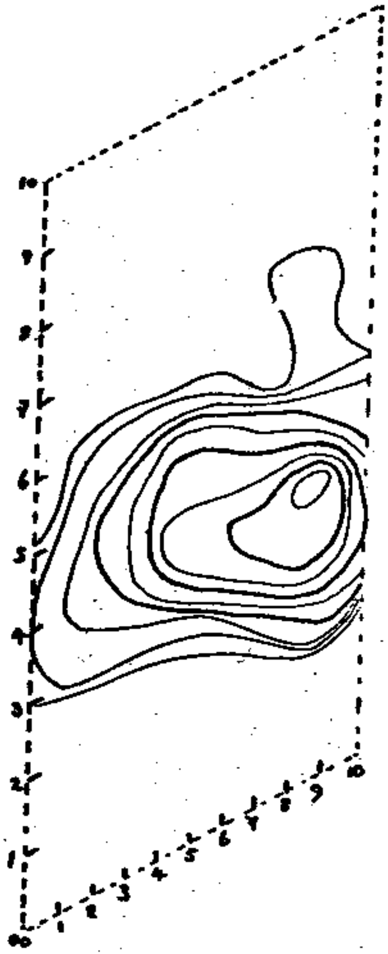

in span as the peak is approached. This method is derived from the 'Evolutionary Operation' based on a factorial design as proposed by Box(8), a method made feasible by the small number of possible evaluation points, although the method has now been generally discarded in industrial applications.

Figure 11 shows the initial search pattern in relation to the area to be covered and the way in which subsequent cycles of search could quarter the area. The current centre 'A' is defined as the point in the previous cycle with the best response. In the final hardware version a more complex response function involving the percentage error of the desired force was implemented to improve response to small demands. A threshold was included to detect very small demands and inhibit the hill climber since stimulus position errors then have no significant effect.

Figure 12 shows a block diagram which represents, in simplified form the physical hill climbing system based on the above algorithm. It consists basically of a recirculating memory loop that only accepts perturbations into the memory if the result is an improvement in the response. Figure 13 shows the hill climber block as a component of the overall control scheme.

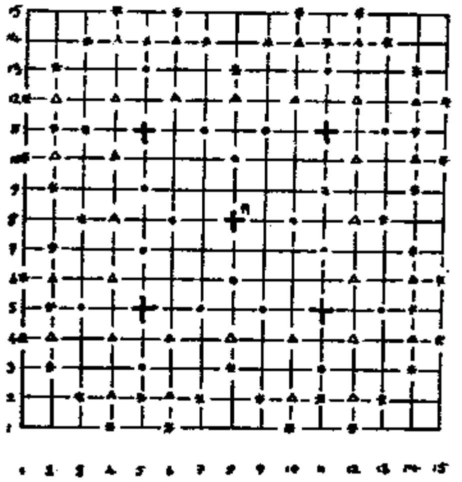

Figure. 11. Diagram of initial five point search pattern shown in relation to the total electrode area and its posible subsequent developement.

On donning the electrode matrix the system is initially set up by first clearing all registers and memories and then entering the co-ordinates of the matrix centre 0111, 0111 (7, 7) in the Current Centre Memory File to give the starting point of the fine point search pattern. This pattern is generated by sequentially adding and subtracting the contents of the Decrement Register to the co-ordinates held in the Current Centre Memory File. The address thus generated is used to programme the time multiplexing electrode drive system. It is also feedback and presented to the New Centre Memory File only to be entered if a shift yields an improvement in the performance function. The add/subtract sequence is controlled by a decade counter feeding a hard wired code converter, as tabulated in Figure 14. The overall hill climb sequence is controlled from a Master Phase Counter that is responsible for resetting, loading initial centre, enabling the stimulus gate, etc.

Initially the system was tested with a small electrode matrix of some 90 elements (0.3 cm^2 area) and a simple 'force maxima' performance criterion. With some care in positioning the electrode matrix over the general region of the desired motor point the system converged on to the best site in approximately 30 seconds. However, because of the restricted area covered by the electrode there was a tendency for the system to become unstable as the active region moved outside the electrode. The electronic system was designed for a much larger matrix than was initially constructed. A larger electrode matrix (256 elements each 0.5 cm^2 area) has now been assembled and is currently being tested.

In summary it is apparent that:

1. A Time Division Multiplexed multiple electrode is a feasible means of applying surface functional stimulation.

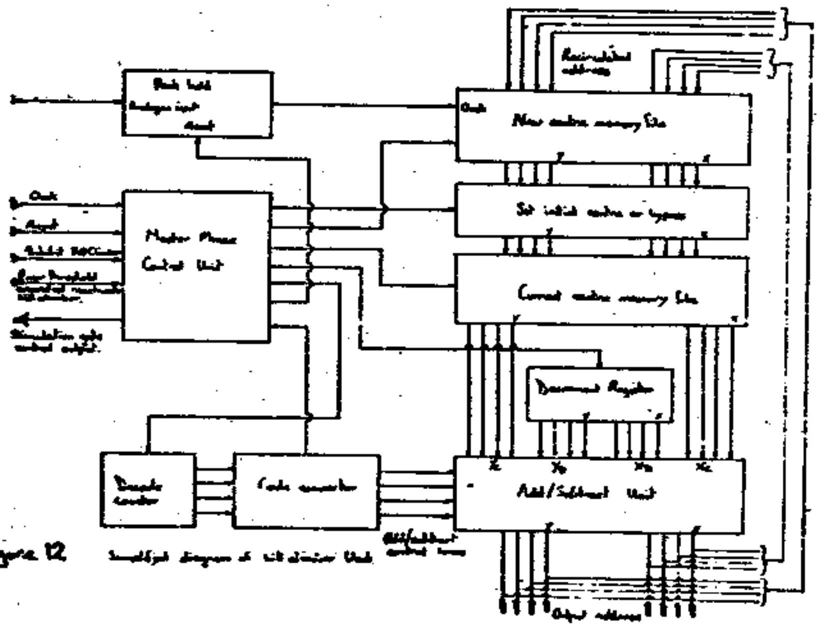

Figure 12 Simplified diagram of sub-stimulator Unit

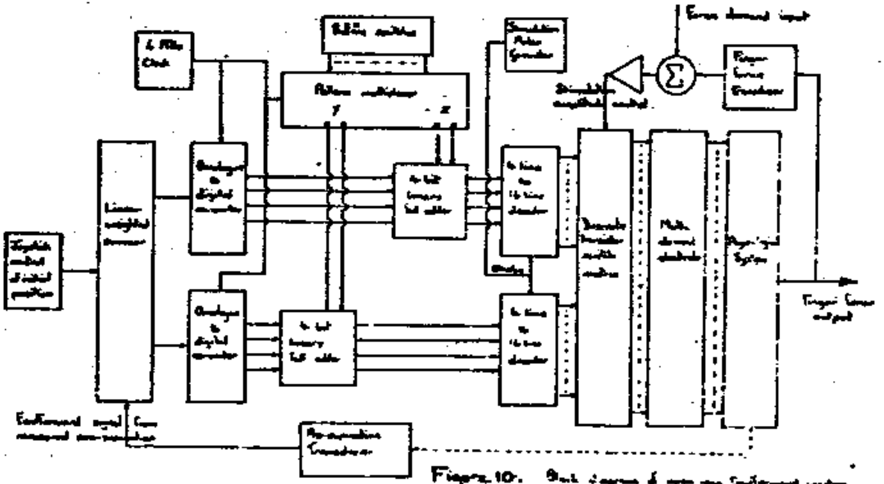

Figure 10. Block diagram of [illegible] Feedforward motion combination system designed to reduce dependence on pro-supination

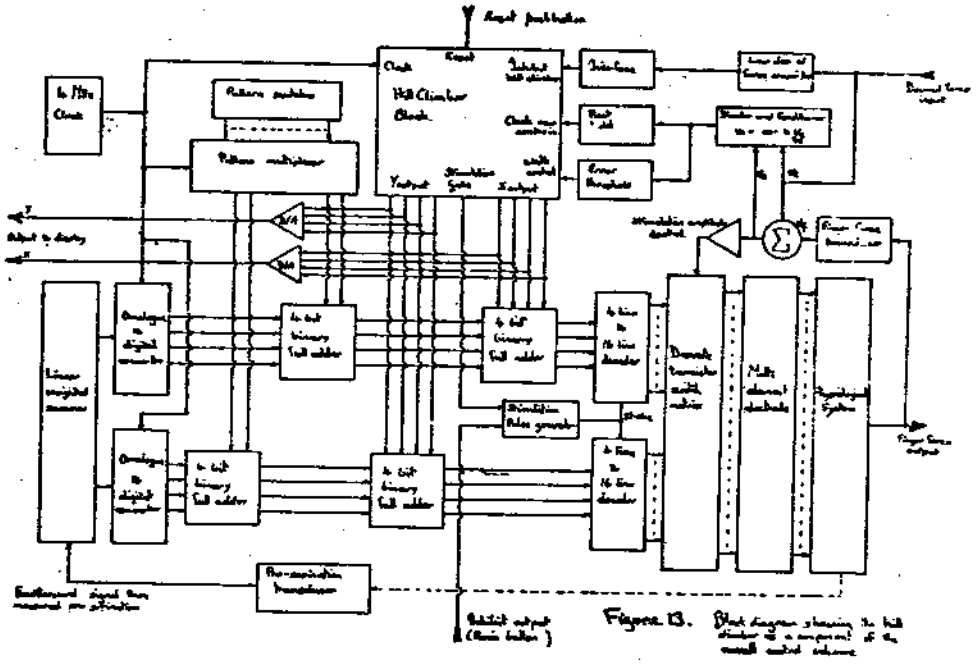

Figure 13. Block diagram showing the hill climber as a component of the overall control scheme

TABLE 14

Showing the Add/Subtract Sequence Required to Generate the Five Point Pattern

where : x = irrelevant, 1 = true, 0 = false,
X_c = current X co-ordinate
Y_c = current Y co-ordinate
primed are subsequent
D = contents decrement register

Phase	Add/Subtract (0 = add, 1 = sub)		True/Zero (0 = zero, 1 = true)		Function Implemented
	X_{axis}	Y_{axis}	X_{axis}	Y_{axis}	
0	x	x	0	0	X_c Y_c
1	0	0	1	1	X_c+D, Y_c+D
2	0	1	1	1	X_c+D, Y_c-D
3	1	0	1	1	X_c-D, Y_c+D
4	1	1	1	1	X_c-D, Y_c-D
				D=D-1	
5	x	x	0	0	X_c' , Y_c'
6	x	0	0	1	X_c' , $Y_c'+D$
7	x	1	0	1	X_c' , $Y_c'-D$
8	0	x	0	1	$X_c'+D$, Y_c'
9	1	x	1	0	$X_c'-D$, Y_c'
				D=D-1	
0	x	x	0	0	X_c'' , Y_c''

2. The benefits accrued from being able to move the stimulus site without any physical movement of the patient are considerable, in terms of initial assessment and function evaluation.

3. That a simple open loop feed forward position correction is useful and the average applied voltage can be reduced with consequential reduction in skin sensation and power consumption.

4. That self-adjusting automatic electrode positioning is possible which can converge in a usefully short time.

5. That miniaturisation of the system electronics, using current technology, could lead to a system of comparable proportions to existing patient stimulators.

6. That the most pressing need for future work is the design of cosmetically acceptable force transducers with useful life expectancies.

This work was supported by a Science Research Council Studentship award and undertaken in the Control Group, Department of Electronics, Southampton University.

References

1. S.A.G. Chandler and E.M. Sedgwick : 'A proportional stimulator for functional electrical stimulation advances in external control of human extremities', Proc. Fourth International Symposium, Dubrovnik, 1972.

2. J.M. Nightingale and S.A.G. Chandler : 'Concept of a neurological prosthesis in the control of human extremities', Proc. Fourth International Symposium, Dobrovnik, 1972.

3. Franjo Gracanin, (Principal Investigator) : 'Use of functional stimulation in rehabilitation of hemiplegic patients', Final Report Project, 19-P-58395-F-012-66, 1972, Institute of the S.R. Slovenia for Rehabilitation of the Disabled.

4. Lojze Vodovnik, (Principal Investigator) : 'Development of orthotic systems using functional electrical stimulation and myoelectric control', Final Report Project, 19-P-58391-F-01, 1971, University of Ljubljana, Faculty for Electrical Engineering.

5. R. Pasniczek, J. Kiwerski, J. Wirski and H. Borowski : 'Some problems of implant stimulation applied to grasp movements', Proc. Fourth International Symposium, Dobrovnik, 1972.

6. S.A.G. Chandler : Ph.D. Thesis, May, 1973, University of Southampton.

7. R.W. Todd, Ph.D. Thesis, October, 1970, University of Southampton.

8. G.E.P. Box : 'Evolutionary operation : a method for increasing industrial productivity', Applied Statistics, 2, 81-101, 1957.

2. The benefits accrued from being able to move the stimulus site without any physical movement of the patient are considerable, in terms of initial assessment and function evaluation.

3. That a simple open loop feed forward position correction is useful and the average applied voltage can be reduced with consequential reduction in skin sensation and power consumption.

4. That self-adjusting automatic electrode positioning is possible which can converge in a usefully short time.

5. That miniaturisation of the system electronics, using current technology, could lead to a system of comparable proportions to existing patient stimulators.

6. That the most pressing need for future work is the design of cosmetically acceptable force transducers with useful life expectancies.

This work was supported by a Science Research Council Studentship award and undertaken in the Control Group, Department of Electronics, Southampton University.

References

1. S.A.G. Chandler and E.M. Sedgwick : 'A proportional stimulator for functional electrical stimulation advances in external control of human extremities', Proc. Fourth International Symposium, Dubrovnik, 1972.

2. J.M. Nightingale and S.A.G. Chandler : 'Concept of a neurological prosthesis in the control of human extremities', Proc. Fourth International Symposium, Dobrovnik, 1972.

3. Franjo Gracanin, (Principal Investigator) : 'Use of functional stimulation in rehabilitation of hemiplegic patients', Final Report Project, 19-P-58395-F-012-66, 1972, Institute of the S.R. Slovenia for Rehabilitation of the Disabled.

4. Lojze Vodovnik, (Principal Investigator) : 'Development of orthotic systems using functional electrical stimulation and myoelectric control', Final Report Project, 19-P-58391-F-01, 1971, University of Ljubljana, Faculty for Electrical Engineering.

5. R. Pasniczek, J. Kiwerski, J. Wirski and H. Borowski : 'Some problems of implant stimulation applied to grasp movements', Proc. Fourth International Symposium, Dobrovnik, 1972.

6. S.A.G. Chandler : Ph.D. Thesis, May, 1973, University of Southampton.

7. R.W. Todd, Ph.D. Thesis, October, 1970, University of Southampton.

8. G.E.P. Box : 'Evolutionary operation : a method for increasing industrial productivity', Applied Statistics, 2, 81-101, 1957.