ON INVESTIGATION OF COOPERATION OF MUSCLES IN WRIST JOINT

A. Morecki, J. Ekiel, K. Fidelus, L. Skorupski, and K. Tempinski

Summary

This paper deals with investigations of muscle cooperation of flexors, extensors, abductors and adductors, governing the wrist joint in static conditions.

A special test-stand and recording system permitted simultaneous recording of the mechanical parameters and myopotentials.

This made it possible to develop more knowledge concerning cooperation of muscles governing the wrist joint, for some particular cases and complex motions.

Grapho-analytical and numerical methods were used for data processing. The comparison of the results is given in the conclusion.

Results obtained may be used in the synthesis of multichannel prostheses for the upper limb, and in the course of medical rehabilitation.

Introduction

Early works of the authors [1, 2, 3, 5] contain some principles of controlling the muscle system of the upper limb, as well as biomechanical and bioelectric relations. The basic problem is lack of knowledge concerning the cooperation of various muscles of the upper limb, engaged in a specified motion and work. The results obtained so far by the authors, in the field of biomechanics of upper limb, are concerned with joints having one degree of freedom only.

The main objective of this work is the determination of the cooperation of muscles governing the wrist joint engaged in a complex motion. An investigation of the wrist joint having two degrees of freedom gives an opportunity for a better understanding of the mechanism of cooperation of a greater number of muscles.

The investigations obviously, get more complicated theoreticaly and practically. It is more difficult to interpret the obtained results and to discover the general relationships. The special methods of investigation were developed, and a special testing-stand and multichannel recording equipment had to be built.

Cooperation of the Muscles

By the cooperation of the muscles governing the joint having two degrees of freedom, is understood the value of the developed torque according to the following expression:

$$M_i = a_i \cdot \frac{U_i}{U_{i\,max}} \frac{F}{F_o}\left(\frac{L}{L_o}\right) r_i(\alpha) \cos|(\alpha-\pi)| \cdot \cos|(\beta-\pi)| \qquad (1)$$

where U_i — is the value of the integrated electromyogram, developed by the i-th muscle in the definite angle position determined by angles α and β.

$U_{i\,max}$ — is the max. value of the integrated electromyogram U_i developed by the i−th muscle. Values U_i and $U_{i\,max}$ are determined from the direct measurements.

$\frac{F}{F_o}\left[\frac{L}{L_o}(\alpha,\beta)\right]$ — is the ratio of the force F developed by the muscle of length L to the force F_o developed by the muscle in position corresponding to the length L_o (with the same stimulation of the muscle). This relation was obtained from the measurements taken on rabbits. [7]

r_i — is the radius of action of the force developed by i-th muscle; the measurements were taken on corpses or on the model of the bone structure of the human.

a_i — coefficient of cooperation determined by ordinary or computerized calculations based on the compatibility of the sum of the muscle torques and external torque M_e.

The equation of cooperation is

$$M_e = \sum_{i=1}^{n} \left\{a_i \frac{U_i}{U_{max\,i}} \frac{F}{F_o}\left(\frac{L}{L_o}\right) r_i(\alpha) \cos|(\alpha-\pi)| \cdot \cos|(\beta-\pi|\right\}, \; Nm \qquad (2)$$

Geometry of the Wrist Joint (Crossectional Area, Position of Muscles, Vectors of Forces and Torques)

The arrangement of the bones and tendons forming the wrist joint are shown in Figure 1. The axes and radii of rotation are shown also. The structure of the natural joint permits flexion, extension, abduction and adduction and every permissible combination. Vectors of forces and torques are marked with arrows (Fig. 1 a). In every position differing from $\sigma=\beta=\pi$ twisting moments will occur. They are taken into account by introducing the angular amendments into

Expression 2. These additional moments are balanced by the reactions of the joint.

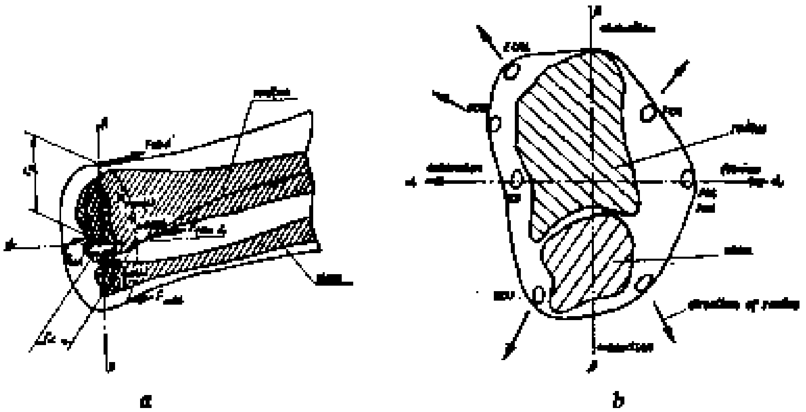

Fig. 1. Force distibrution and geometric parameters of the wrist joint: a) force distribution; b) location of the tendons.

Some of the muscles governing the wrist joint are penniform and some are fusiform. This was taken into consideration while determing the characteristics $\frac{F}{F}\left(\frac{L}{L}\right)$ [7] The measurements included eight muscles as follows: m. flexor carpi ulnaris (FCU), m. flexor carpi radialis (FCR), m. flexor digitorum sublimis (fingers II, III, IV, V ($FDS_{II \text{ and } III}$ $FDS_{IV \text{ and } V}$), extensor carpi radialis longus (ECRL), m. extensor carpi radialis brevis (ECRB), m. extensor digitorum (ED), m. extensor carpi ulnaris (ECU).

The effect of the other muscles placed underneath was neglected since it was impossible to use the surface electrodes with them. Usually these muscles have little crossectional area and their effect is negligible except the muscle FDP i. e flexor digitorum profundus. The assumption was made that this muscle develops the same torque as m. FDS.

Methods

The problem was dealt with by stages. The stages included the following investigations:

a) planar i.e. flexing, extending performed in the saggital plane and abduction and adduction in frontal plane.
b) different external loading, with constant angles α and β
c) complex motions being the combination of basic motions i.e. flexion, extension, abduction, and adduction within the whole range of the motion of the joint.

This order of investigation facilitates data processing which is otherwise very complicated.

Testing-stand and Measuring System

Measured Parameters

The investigations included the following measurements:

— recording the integrated and original myopotentials of eight muscles.

— recording the angles of rotation α and β in planes α and β.

— recording the torque components M_α and M_β developed by muscles in planes of motion α and β.

— measurements of the r_i, which were taken on the corpse and the model of the human bone structure.

— measurements of the ratio $\frac{F}{F_0}\left(\frac{L}{L_0}\right)$[7].

Electromyographs and Strain Gauge Systems

Figure 2 shows the block diagram of the measuring system used in the investigations. It consists of an 8-channel electromyograph, electrodes, measuring stand with force transducers, strain gauge bridge for measuring the torques developed by the muscle system, and recorder.

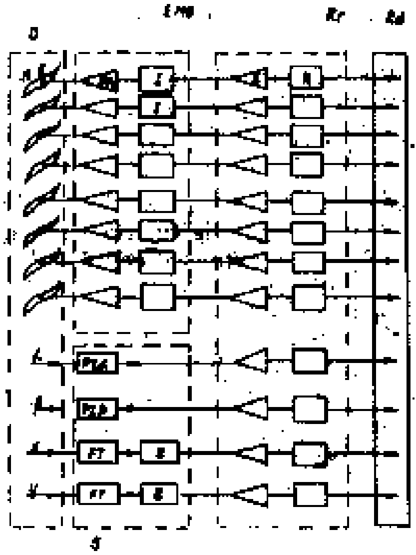

Fig. 2. The block diagram of the measuring system: O — object; M — muscles; E — electrodes; EMG — 8 channels electromyograph; R — recorder; Rd — record; S — testing-stand and circuits for mechanical parameters; PA — preamplifiers; I — integrators; A — amplifiers; R — recorders; B — strain gauge bridges; PI — position indicator; Ft — force transducers.

Measuring Stand

The special testing-stand made it possible to carry out investigations of complex motions independently in two planes within the wide range of joint angles for flexion, extension, abduction, and adduction.

The testing-stand was designed to satisfy the following requirements:

— to enable static and dynamic measurements within a wide range of velocities.

— to enable measurements of the necessary parameters for various persons.

— to ensure long lasting measurements without tiring the subject.

— to have a blocking system for eliminating the detrimental effect of the other parts of the limb on the examined part.

— to transmit the maximum force developed by the subject, approx. 5000 N cm for flexion and extension and approx. 1200 Ncm for abduction and adduction.

— to eliminate the detrimental effect of friction forces.

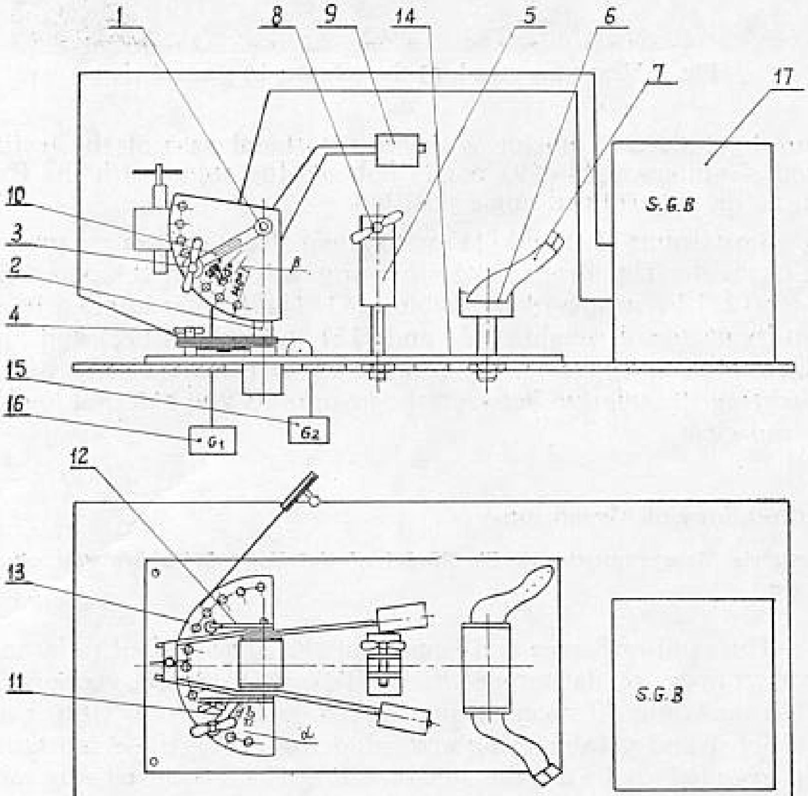

a

Figure 3 shows the diagram of the testing-stand. Axes (1) and (2) permit the revolution of the arm in two perpendicular planes. The position of the arm in static investigations is fixed by means of two screws (3) and (4). The examined arm is placed in a holder (5) and (6) and is fixed with strap (7) and screw (8) so that the natural joint axes coincide with the rotational axes of the testing-stand. Counterweights (9) partly balance the stand with the fixed arm at the determined angle position.

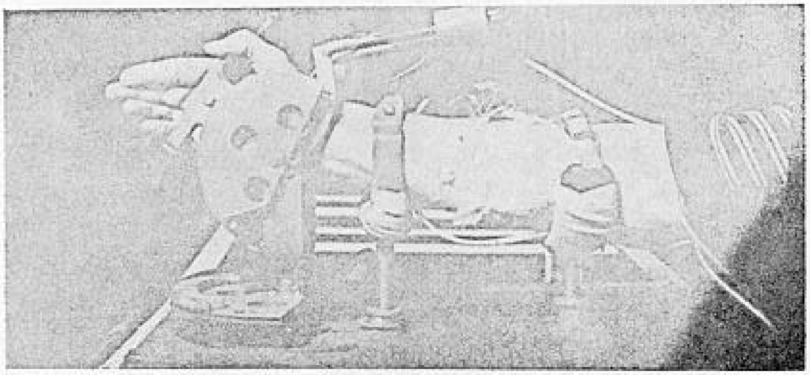

Fig. 3. Measuring stand: a) the scheme; b) general view

Two beams (10) and (11) with glued strain gauges are measuring elements. The strain gauges are connected with the measuring bridge (27) by means of the cable (14). The load is applied to the joint by means of weights (15) and (16) and pulleys (12) and (13). The testing-stand permits the stimulation of the muscles as well as measuring the relation between the myograms and external load on the muscle.

Methodology of Measurements

Geometric Measurements on the Model of the Bone Structure and on the Corpse

The radii of forces and lengths of the muscles had to be measured in order to determine the coefficient of muscle cooperation within the whole 40° range of motion for both planes x (flexing and extending) and y (abducting and adducting). For these motions π was assumed to be in the midposition. The measurements were taken on a special model of the bone structure of the arm (Fig. 4). Tendons and fascias were made from nylon thread and flexible material. Their insertions and lines of action were the same as in a natural limb. The angle positions were set by means of two protractors placed in two perpendicular planes. For every angle position the radii were measured respectively to both axes as well as increments of the muscle length.

The length of the muscle bellies, their position and physiological crossections were determined on the corpse.

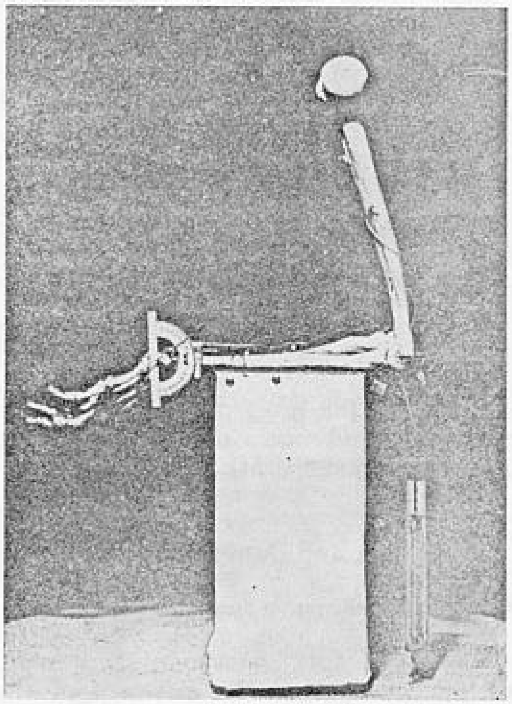

Fig. 4. The stand for geometrical measurements of r and L.

Relation Between the Muscle Length and Developed Force for Penniform and Fusiform Muscles

The muscles governing the wrist joint belong to one of the following categories: penniform and fusiform. For either category of the muscles the dimensionless characteristics $\frac{F}{F_0}\left(\frac{L}{L_0}\right)$ were determined. The differencies between these characteristics are considerable as can be seen from Figure 5.

Measurements of Electromyograms (EMG)

For every set of experiments, EMG's were determined for maximum tension of the muscles and various combinations of motions and positions of the hand. Such obtained values of $U_{i\,max}$ were assumed the value of the tension for all muscle fibers forming the physiological cross-section. These values were maximal for the given conditions of the measurements.

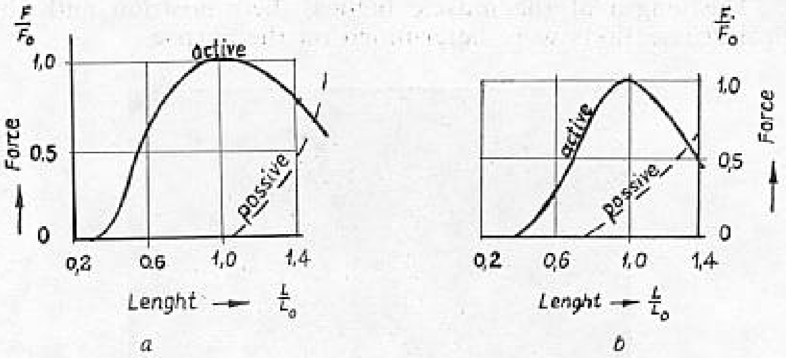

Fig. 5. Relation $\frac{F}{F_o}\left(\frac{L}{L_o}\right)$: a) for fusiform muscles; b) for penniform muscles.

Thus, the values of the integrated EMG U_i were proportional to the number of the excited motor units engaged in a given motion. The values of U_i were measured after calibrating the scale.

Results of the Experiment and Data Processing

Measurements in two perpendicular planes

According to the accepted methodology, coefficients of the muscle cooperation obtained in the first set of the experiments, were determined for two perpendicular planes.

The experiments were carried out for three muscle efforts — 100%, 50% and $25^{0}/_{0}$. The coefficients of cooperation a_i were determined by methods of trials.

Measurements in a Fixed Position $\alpha=\beta=\pi$ with Various Applied External Torques

The hand was fixed at angles $\alpha=\beta=\pi$. The subject was asked then to perform various combinations of motions as follows:

simultaneous extension and abduction
" " adduction
flexion " abduction
" " adduction

The subject developed various torques according to the combination of the motions. EMG of eight muscles engaged in the motion were recorded. The values of the torque components were read directly from the indicating dial of the strain gauge bridge.

In the course of the rough data processing the assumption was made on the coextension of the vectors of external torques and the resultant torque being the geometrical sum of the muscle torques.

The search for the compatibility of the modulus and action lines of the torques, was the next step in data processing.

Applying the vector analysis to the set of forces and radii, four vectors of torque were obtained: M_{flex}, M_{ext}, M_{abd}, and M_{add} (see Fig. 1a).

Note may be taken that vectors M_{flex} and M_{ext} are coextensive with the radii r_{abd} and r_{add} as well as vectors M_{add} and M_{abd} are coextensive with the radii r_{flex} and r_{ext}.

In the course of the data processing the following formulas were taken into account:

$$M_\beta = \sum_{i=1}^{8} a_i \frac{U_i}{U_{i\,max}} r_{\beta i} \frac{F}{F_0} \left[\frac{L}{L_0} (\alpha, \beta) \right],$$

$$M_\alpha = \sum_{i=1}^{8} a_i \frac{U_i}{U_{i\,max}} r_{\alpha i} \frac{F}{F_0} \left[\frac{L}{L_0} (\alpha, \beta) \right], \tag{3}$$

where M_α and M_β are the components of the external torque developed by the examined person r_α and r_β components of the radii of the muscle forces. The remaining parameters are the same as in formula (2). In the course of determining the coefficients a_i a set of eight equations with eight unknowns was obtained. Since the number of equations (depending on the number of the measurement points) is usually larger than the number of the unknowns, values of a_i which satisfy the equation best should be found.

An example of data processing for positions 4 and 5 is given in Table 1 and diagrams in Figure 6.

For the positions (4), (5), (7), (14) and (21) the following set of equations was obtained

$$-0.792a_1 + 8.5a_2 + 16.3a_4 + 8.9a_6 - 4.32a_8 = 119$$
$$-0.72a_1 - 0.93a_2 - 0.6a_3 + 16.2a_5 - 19a_6 - 8.6a_8 = 23$$
$$-9.62a_1 + 4.25a_4 + 1.34a_6 + 1.86a_7 + 4.63a_8 = -94$$
$$-8.28a_1 - 4.68a_2 - 8.39a_3 + 1.33a_5 + 1.86a_7 + 4.63a_8 = -60$$
$$-8.0a_1 + 8.5a_2 + 4.53a_5 + 1.25a_6 - 7.76a_8 = 14.2$$
$$-7.34a_1 - 9.3a_2 - 18.a_3 + 14.5a_5 + 2.66a_6 + 1.4a_7 + 4.13a_8 = -216$$
$$0.6a_2 + 12.7a_4 + 4.98a_6 - 3.6a_8 = 68$$
$$0.66a_2 + 12.6a_4 + 10.64a_6 + 6.58a_7 + 1.91a_8 = 41$$
$$-2a_1 + 2.24a_5 + 1.5a_6 - 10.1a_8 = 43$$
$$-1.84a_1 - 2.39a_3 + 2.2a_5 + 3.2a_6 + 1.85a_7 + 5.4a_8 = 41$$

Table 1

	Position 4							Position 5				
Param. / Muscle	1 r_β (mm)	2 r_α (mm)	3 $\frac{U_i}{U_{i\,max}}$	4 $\frac{U_i}{U_{i\,max}} r_\beta$	5 $\frac{U_i}{U_{i\,max}} r_\alpha$	6 $a_i \frac{U_i}{U_{i\,max}} r_\beta$	7 $a_i \frac{U_i}{U_{i\,max}} r_\alpha$	8 $\frac{U_i}{U_{i\,max}}$	9 $\frac{U_i}{U_{i\,max}} r_\beta$	10 $\frac{U_i}{U_{i\,max}} r_\alpha$	11 $a_i \frac{U_i}{U_{i\,max}} r_\beta$	12 $a_i \frac{U_i}{U_{i\,max}} r_\alpha$
FCU	−12	−11	0 066	−0.792	−0.72	−6.4	−5.6	0.802	−9.62	−8.82	−77	−70.6
FCR	10	−11	0.879	−8 35	−9.35	42.5	−47	0.425	4.25	−4.68	21.3	−23.4
FDS$_{IV,\ V}$	0	−18	0.033	—	−0.6	—	−2.4	0.466	0	−8.39	—	−33.6
FDS$_{II,\ III}$	0	−18	—	—	—	—	—	—	0	0	—	—
ECRL	18.1	18	0.901	16.3	16.2	49	49	0.074	1,34	1.33	4	4
ECRB	8.9	19	1.000	8.9	19	9	19	—	—	—	—	—
ED	0	14	0.666	—	9.4	—	9.4	0 133	—	1.86	—	1.9
ECU	−18 8	10	0.230	−4.32	−2.3	−8.6	4.6	0.463	−8.7	4.63	−17.4	9.3
					$\sum_{i=1}^{8} M_i$	85	27			$\sum_{i=1}^{8} M_i$	−69.1	−112
					M_β, M_α	119	23			M_β, M_α	−91	−60

An example of determining the compatibility of the sum of muscle torques and the external torque for position (4) is shown inin Figure 6. Applying the method of geometric summation of the vectors representing the cooperation of determined muscles, a

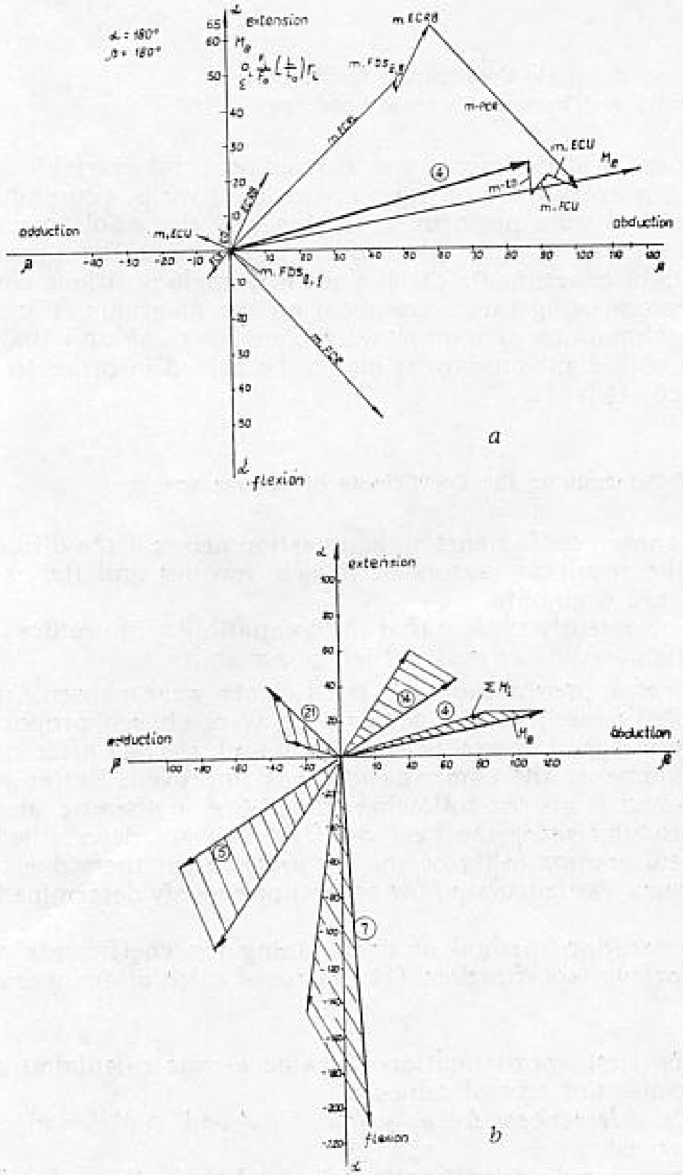

Fig. 6. An example of data processing for assumed compatibility of modulus and action lines: a) for position(4); b) for position (5).

polygon of forces was obtained, the closing side of which is the sum of the muscle torques. In Figure 6a the diagram representing M_z was also plotted for comparison. The results for the remaining positions are given in Figure 6b.

The values of the coefficients a_i were the same for all positions of the hand.

Investigations of Muscle Cooperation for Various Angles α and β and Various External Loadings

This set of experiments was carried out for variable angles α and β · For every fixed position of the hand various combinations of the motions were performed. In this way the whole measuring range and measuring plane were covered for various fixed positions. The results of experiments carried out in 9 angle positions covering the whole measuring range are given on the diagrams (Fig. 7). 29 and 54 combinations of motion were considered. 58 and 108 linear equations with eight unknowns had to be solved in order to determine the coefficient a_i.

Methods of Determining the Coefficients of Cooperation a_i

For chosen coefficients a_i the question arises if the differences between the resultant vectors of muscle torques and the external torque M_z are negligible.

It is apparently evident that the compatibility of vectors should concern the modulus as well as their phase shifts.

In first approximation the coefficients were chosen "intuitively" by Pril's method. The values of a_i were chosen proportional to the physiological crossection of the muscles. Then after making some amendments the compatibility was improved. Better results were obtained from the following method of arithmetic mean: in every measuring point the best coefficients were determined (for almost ideal compatibility of the torques). Then the value of arithmetic mean was calculated for several previously determined coefficients.

The iteration method of determining the coefficients a_i was used for further modification. The course of calculations was as follows:

— the first approximation of value a_i was calculated as the arithmetic mean of several values a_i'.

— the differences $\Delta M_\alpha' = M_\alpha - M_{\alpha_i}'$ and $\Delta M_\beta' = M_\beta - M_\beta$ were calculated

— the second approximation diminishing values of a_i'' and $\Delta M_\alpha''$, $\Delta M_\beta''$ was determined.

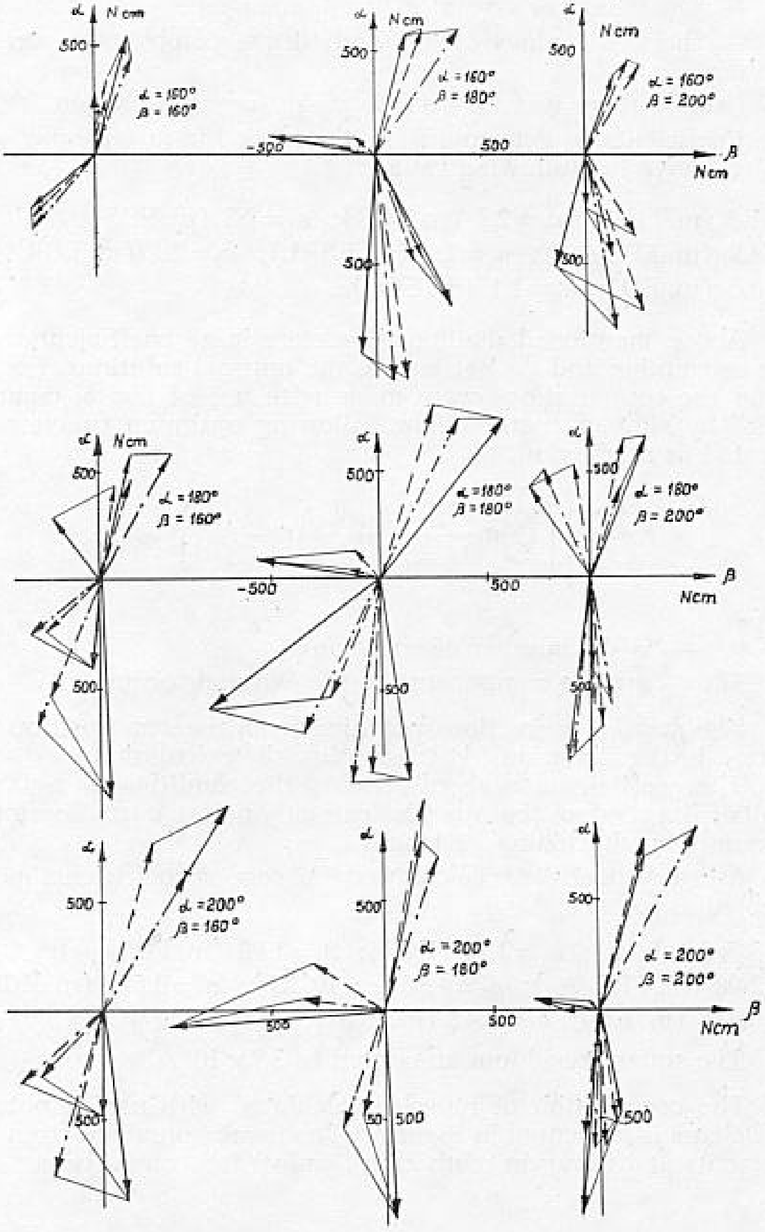

Fig. 7. An example of data processing for the whole measuring range:

— continuous line — experimental results;
— dotted line — results obtained from iteration method;
— dash-dotted line — results obtained from computerized method accordingly to the criterion (4).

— The values of several a_i'' were changed .

— the final values of a_i''' and torque components were determined.

Usually there was no need to make further iteration.

Coeficients a_i determined in this way for an example given in Fig. 7 have the following values:

$a_1=1.8$ (m. FCU); $a_2=2.5$ (m. FCR); $a_3=2.3$ (m. $\mathrm{FDS}_{\mathrm{IV,\,V}}$);
$a_4=4.9$ (m. $\mathrm{FDS}_{\mathrm{III,\,II}}$); $a_5=2.0$ (m. ESRL); $a_6=2.1$ (m. ECRB);
$a_7=4.5$ (m. ED); $a_8=1.1$ (m. ECU).

Above mentioned methods of determining coefficients a_i are time consuming and do not ensure the optimal solutions. For that reason the computations were made with use of digital computer "Gier" by simplex method. The following optimum function was accepted as a criterion.

$$K=\sum_{j=1}^{n}\left[\sum_{i=1}^{8}a_i\frac{U_{ij}}{U_{i\,\max}}\frac{F}{F_o}\left(\frac{L}{L_o}\right)r_{ij}-M_{ej}\right]^2=\min. \tag{4}$$

where

n — is the number of equations

M_{ej} — are the components of the external torque.

The angular corrections resulting from the arm position were omitted in the Equation (4) to simplify the calculations.

The coefficients a_i should satisfy the condition $a_i > 0$. This results from the fact that muscles can only pull, i. e can develop the force only by shortening its length.

As a result of these calculations 32 sets of coefficients a_i were accepted as follows:

$a_1=3.7$ (m. FCU); $a_2=2.51$ (FCR); $a_3=1.98$ (m. $\mathrm{FDS}_{\mathrm{IV,\,V}}$);
$a_4=2.08$ (m. $\mathrm{FDS}_{\mathrm{II,\,III}}$); $a_5=4.36$ (m. ECRL); $a_6=0.871$ (m. ECRB);
$a_7=0.418$ (m. ED); $a_8=1.42$ (m. ECU).

The square residuum amounted to 3.7×10^4.

The cooperation of muscles calculated with use of obtained coefficients is presented in Figure 7. The results obtained from measurements and iteration method are shown for comparison.

Conclusion

As it is evident from the alleged results the criterion (4) enables us to determine the coeficients a_i satisfying the compatibility of muscle torques and external torque M_e.

Small discrepancies result from the measuring errors of geometric parameters, electromoygraphs and neglect of the other muscles.

Biomechanic investigations of the muscles governing the wrist joint for motions of flexion, extension, abduction, and adduction, for various loadings and persons enabled us to determine the cooperatic of these muscles.

The results of this work may be applied to the synthesis of the prostheses, to medical rehabilitation, and to sport training.

This work is a continuation of investigations carried out by the group: dr inz. J. Ekiel (Kat. Budowy Aparatów Elektro-medycznych, Politechnika Warszawska, Pl. Jedności Robotniczej 1), doc. dr K. Fidelus, dr L. Skorupski (Zakład Teorii Sportu Akademii Wychowania Fizycznego, Warszawa, ul. Marymoncka 34), mgr inz. Buśko, mgr inz. K. Kedzior, prof. dr inz. A. Morecki, mgr inz. K. Nazarczuk, mgr inz. K. Tempinski (Zakład Miernictwa Wielkości Dynamicznych przy Katedrze TMM, Politechnika Warszawska, Al. Niepodległości 222).

REFERENCES

1. Morecki, A., Ekiel, J., Fidelus, K., "Certains problèmes biocybernetiques appliqués aux relations des membres supérieurs et d'un élément prothetique", *Médecine Cybernétique IVe Congrès International*, Nice, 1966.
2. Morecki, A., Ekiel, J., Fidelus, K., "The Pheriphal Organization of Eternally Controlled Natural and Artificial Limbs", *Automozione e Strumentazione*, Volume II, FAST, Milano, 1967.
3. Morecki, A., Ekiel, J., Fidelus, K., "Some Problems of Controlling a Live Upper Extremity and Bioprosthesis by Myopotential External Control of Human Extremities", *Proceedings of the Symposium on External Control of Human Extremities*, Belgrade, 1967.
4. Morecki, A., Fidelus, K., Ekiel, J., Nazarczuk, K., "Issledowanije wzaimnogo uczestja myszcz w dwizenijach wierhnich konieczenostej czełowieka", *Biofizika*, T. XIII, w. 2, 1968.
5. Morecki, A., Ekiel, J., Fidelus, K., Tempinski, T., "O charakterystyce statycznej mięśnia pierzastego", *Wychowanie Fizyczne i Sport*, t. XII, z. 2, 1968.
6. Morecki, A., Nazarczuk, K., "Niekotoryje woprosy bioelektriczeskogo uprawlenija", *V sowieszczanije po osnownym problemam teorii maszin i mechanizmow*, Suchumi, 1967.
7. Morecki, A., Nazarczuk, K., "Some Problems of Bioelectric Control of Natural and Artificial Limbs", *Archiwum Budowy Maszyn*, PAN t. XVI z. 1, 1969.
8. Fidelus, K., "Some Biomechanical Principles of Muscle Cooperation in the Upper Extremities", *Biomechanics I*, 1 st Inter. Seminar, Zurich, 1967.