Relationship between intraneural electrical stimulation and evoked pressure sensation –Psychophysical quantification–

Takafumi Suzuki*, Kunihiko Mabuchi*, Masanari Kunimoto**, Makoto Shimojo***,
Takashi Saito*, Naoto Kakuta*, Michiko Ohkura****, Masatoshi Ishikawa*****
*Center for Collaborative Research, University of Tokyo, 4-6-1 Komaba, Meguro-ku, Tokyo, Japan
**Department of Neurology, Yokohama Rosai Hospital
3211, Kozukue-cho, Kohoku-ku, Yokohama, Kanagawa, Japan
***Faculty of Engineering, Ibaraki University,
4-12-1 Nakanarusawa, Hitachi, Ibaraki, Japan
****Shibaura Institute of Technology, 307 Fukasaku, Omiya-shi, Saitama, Japan
*****School of Engineering, University of Tokyo, 7-3-1 Hongo, Bunkyo-ku, Tokyo, Japan
E-mail: suzuki@ccr.u-tokyo.ac.jp

Abstract– Artificial limbs may gain sensory function through electrical stimulation of sensory nerves. In order to clarify how the intensities and areas of pressure sensation can be controlled when electrically stimulating sensory nerves, the relationship was studied between the stimulation signal, which is input intraneurally into a single mechanoreceptor unit, and the subjective intensities of the evoked sensations. The subjective intensities of the evoked sensation were psychophysically quantified using an actual mechanical stimulus to administer a standard stimulus. The subjective magnitude of the evoked sensation was found to intensify with an increase in the stimulus frequency.

We could thus control the subjective intensities of the evoked sensation by adjusting the frequency of the pulse of the stimulation signal.

This technique, in conjunction with the development of a multi-channel microelectrode capable of stimulating individual sensory units, could be used to induce pressure sensations in artificial limb systems.

INTRODUCTION

Electrical stimulation of sensory nerves is thought to be a promising way of giving a sensory function to artificial limbs. Intraneural microstimulation of a single afferent sensory nerve fiber is known to evoke the same artificial sensation as is evoked by mechanical stimulation of the mechanoreceptor unit itself, which is innervated by the same nerve fiber.[1]

It is important to understand how to determine the parameters of stimulation signals if the intensities and areas of the evoked sensations are to be controlled. We have been studying the relationship between the stimulation signal, which is input intraneurally into a single mechanoreceptor unit, and the subjective intensities and areas of the pressure sensations evoked by the stimulation.

We have reported an experiment in which the subjective intensities of the evoked sensation were quantified with a magnitude estimation method.[2] This method is common and widely used in the field of psychophysics. With this method, the subjects described the subjective intensities as a ratio comparing it to standard stimuli. We used a 20Hz pulse stimulation as the standard stimulus. The pulse frequency was altered from 1 to 500 Hz.

We then developed a prototype system in which a subject experiences mechanical stimuli as tactile sensations after electrically stimulating sensory nerve fiber.[3] The pulse frequency of the stimulation signal was determined by using the results of a previous study.

In that method, however, we were unable to determine the amount of gram force pressure a subject felt because the number acquired by magnitude estimates represents a ratio only.

In this paper, we propose a new method to quantify the subjective intensities in which a subject compares the evoked sensation to the real stimulation administered on the surface of their hands and determines the real stimulation that gives the same intensity as the evoked sensation. This process is equivalent to what is called “acquiring the point of subjective equality (PSE)” in the field of psychophysics. Ways to measure the PSE include the method of adjustment, the method of limits, and the

constant method. Each method has its strengths and weaknesses. In our experiments, there is a time limit during which single sensory units can be stimulated. Therefore, we adopted the adjustment method because it takes a relatively short time to measure the PSE.

By using this new method, the intensity of evoked sensation is quantified so that we can generate any intensity by choosing an appropriate frequency for the pulse of the electrical stimulation.

METHODS

The experiments were performed on human subjects who were awake. A tungsten microelectrode was inserted percutaneously into the median nerve and fixed at a point where the activities of a single slowly adapting mechanoreceptor unit could be recorded. Electrical micro-stimulation was then administered with the same microelectrode using square-wave pulses of a 250-μsec duration. First, the frequency was fixed at 20 Hz, and the amplitude of the stimulating pulses was gradually raised from zero and fixed at the level where the subject felt a sensation at one point on the hand. Then, while the frequency varied between 1 and 500 Hz, the subjective intensities of the evoked sensation were psychophysically quantified by using an actual mechanical stimulus to administer a standard stimulus. The method is described in detail below.

Figure 1 shows the system. The mechanical stimulator controls the intensity of the real mechanical stimulation on the surface of the hand by feedback from the pressure sensor mounted on top of the stimulator. Consequently, a PC can control both, the frequency of the electrical stimulation pulse of the sensory nerve fiber and the intensity of the real stimulation on the surface of the hand. Figure 2 shows the entire system.

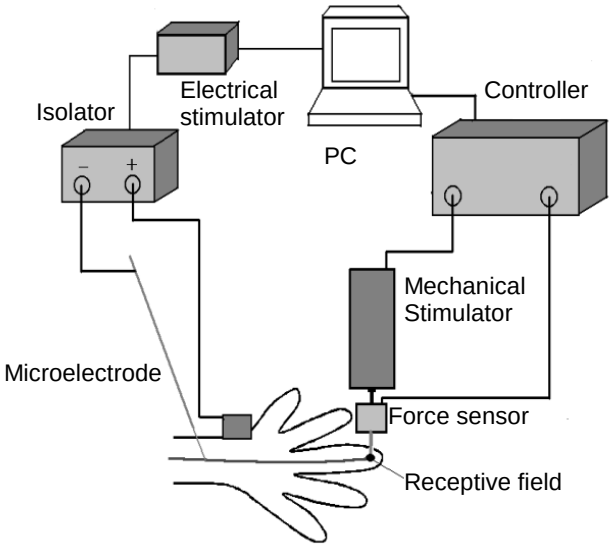

Fig.1: Outline of the whole experiment system

Fig.2: Experiment System

In the first step of the adjustment method, a standard stimulus is administered to the subject. The subject then adjusts the comparison stimulus until he feels that the intensities of the two stimuli are equal. The intensity of the comparison stimulus is then recorded.

In the quantification experiment, two methods are possible. In the first method, the subject adjusts the intensity of the real stimulus. In the second method, the subject adjusts the frequency of the electrical stimulus. This paper reports both experiments.

RESULTS

Figure 3 shows the result of the quantification. The triangular marks indicate the average measurement of the method in which the subject adjusts the real mechanical stimuli, and the circular marks indicate the average measurement of the method in which the subject adjusts the frequency of the electrical stimuli.

The quantified subjective magnitude of the evoked sensation was found to intensify with an increase in the stimulus frequency. The data from the two methods show the same tendency.

DISCUSSION

These results are in general accord with previous research.[2] Quantified subjective intensities are

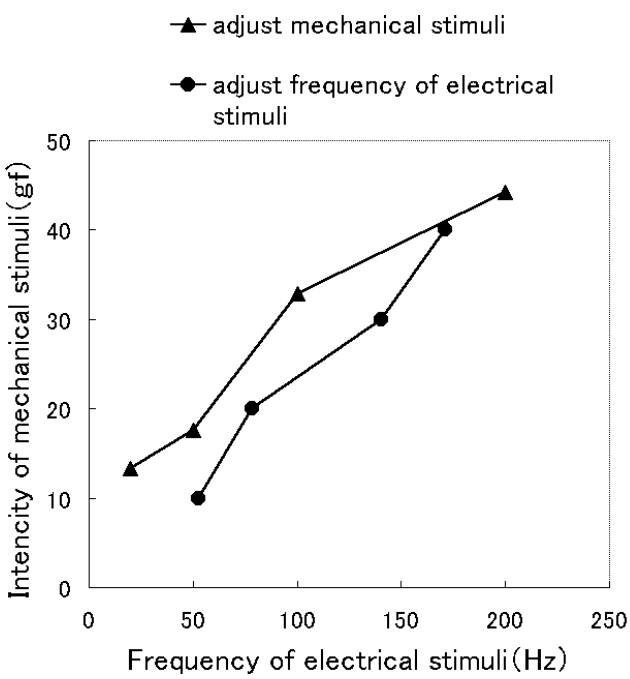

Fig.3: Result of the quantification experiment

proportional to the frequency of the stimulation signals.

However, these results can be used for generating any magnitude of artificial tactile sensation. In this respect, the method of quantification proposed in this paper is a valuable and useful method.

This technique, in conjunction with the development of a multichannel microelectrode capable of connecting each nerve fiber with the electrical signal line of an external device, could be important in an artificial arm system that can sense stimuli and then transfer them to patients as somatic sensations.

CONCLUSION

In order to control the intensities of pressure sensations evoked by electrical stimulation of the sensory nerve, the relationship between the stimulation signal and the subjective intensities of the evoked sensations was studied. The methods of determining the parameters of the stimulation signals were also discussed.

ACKNOWLEDGEMENTS

This study was supported (in part) by a Grant for 'Research for the Future Program # 97I00401 ' from the Japan Society for the promotion of Science.

REFERENCES

[1] Ochoa, J., Torebjork, E.:(1983) Sensations evoked by intraneural microstimulation of single mechanoreceptor units innervating the human hand, J. Physiol., 342, 633-654

[2] T. Suzuki, K. Mabuchi, H. Nishimura, T. Saito, N. Kakuta, M. Kunimoto, M. Shimojo, M. Ishikawa: (1999) The Electrical Control of Pressure Sensations: The Relationship Between Stimulation Signals and Subjective Intensities and Areas, Proc of 21st International Conference of the IEEE EMBS (CD-ROM), 457

[3] T. Suzuki, K. Mabuchi, M. Kunimoto, M. Shimojo, T. Saito, N. Kakuta, M. Ishikawa:(1999) Development of a system for experiencing tactile sensations from an artificial arm by electrically stimulating sensory nerve fiber, Proc. of the EMBEC'99, 776